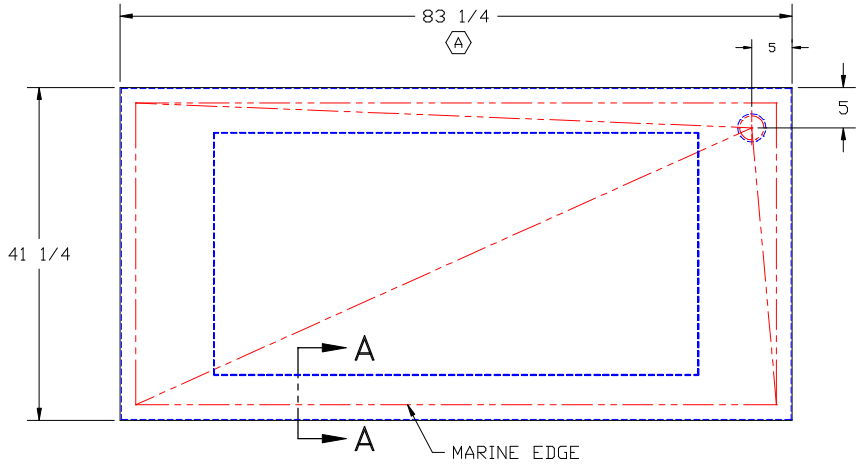

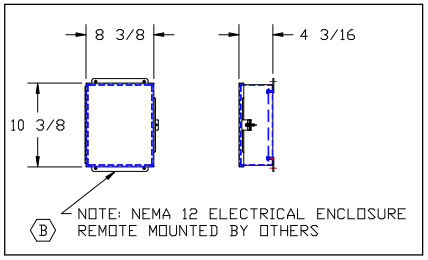

SPECIFICATIONS

CAPACITY:----------3000 lbs uniform load
CAPACITY:----------1500 lbs side edge load
LOW HEIGHT:----------6.75" approx.
VERTICAL TRAVEL:-------42.0"
RAISED HEIGHT:----------48.75"
BASE FRAME SIZE:--------24" wide x 56" long
PLATFORM SIZE:----------32" wide x 56" long of 3/16" plate
BELLOWS GUARD:----------Gorite Duratite PVC plastic accordion style
ACTUATION:----------(2) - 3.5" bore Southworth single acting cylinder

POWER CHARACTISTICS
PRIMARY VOLTAGE:--------115/1/60 Hz.
MOTOR:----------1.0 HP TENV- NEMA 4 Baldor epoxy coated motor w/ water tight wiring & internal to machine
CONTROLS:----------Up/Down hand held pushbutton control in NEMA 4 enclosure
CONTROL VOLTAGE:-------115V
RISE TIME:----------49 seconds
APPROX SHIPPING WT.:----1000 lbs.

APPROVED

PRINT NAME:

DATE:

SIGNATURE:

UTILITY REQUIREMENTS

E ——— ELECTRICAL - 115 V., 1 PH., 60 Hz.

D ——— DRAIN - 3" DIA FLEXIBLE DRAIN HOSE W/QUICK DISCONNECT

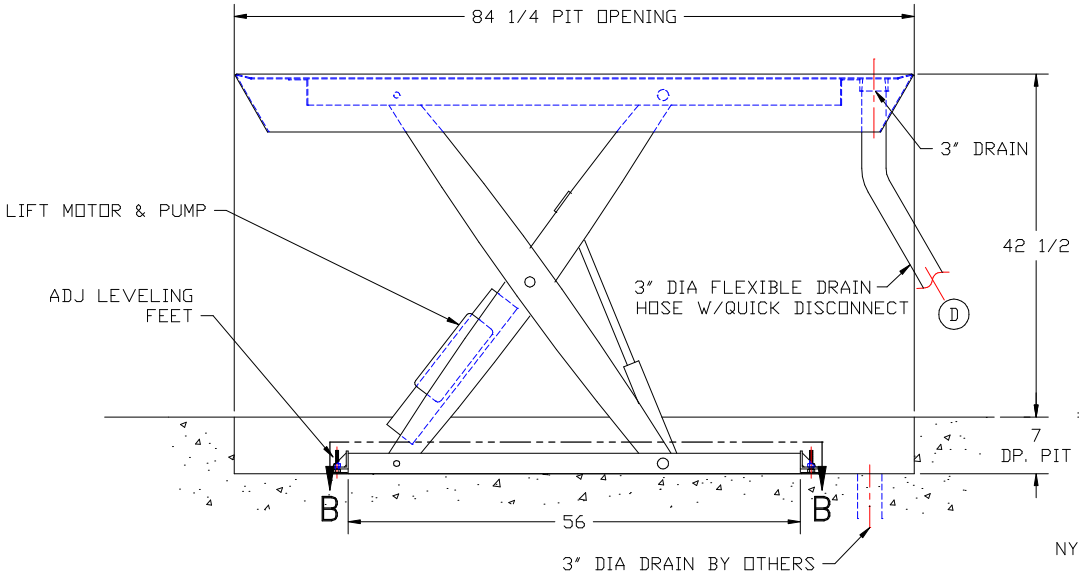

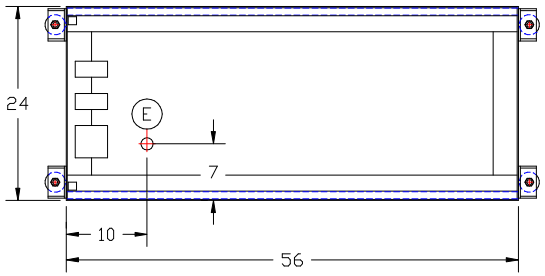

SECTION B-B

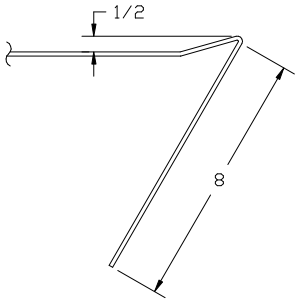

SECTION A-A

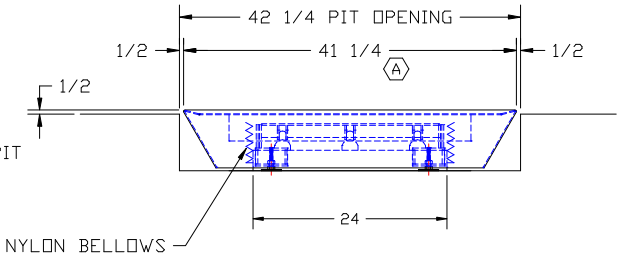

LET.	REVISION	BY	DATE
B	ADDE ELECTRICAL ENCLOSURE AND NOTE	BSC	1-20-04
A	UPDATED TOP'S DIMS. TO FIT A 42-1/4 x 84-1/4" PIT	ALE	10-7-03

TBJ INC
1671 ORCHARD DRIVE
CHAMBERSBURG, PA 17201

SCALE NTS
REF DWG - R03066
DRAWN BY CWF
DATE 8-11-03

3000# LIFT-TYPE NECROPSY TABLE

ROUGH-IN ASSEMBLY | R03108