REV	REVISION	DATE
A	VAISALA, SWR REINSTALLED	05/01/13

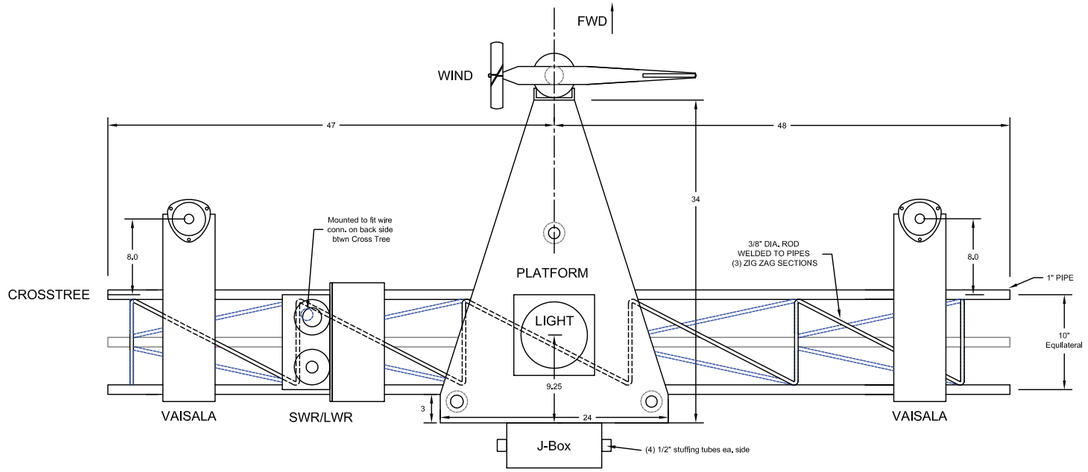

PLAN VIEW LKG FROM ABV

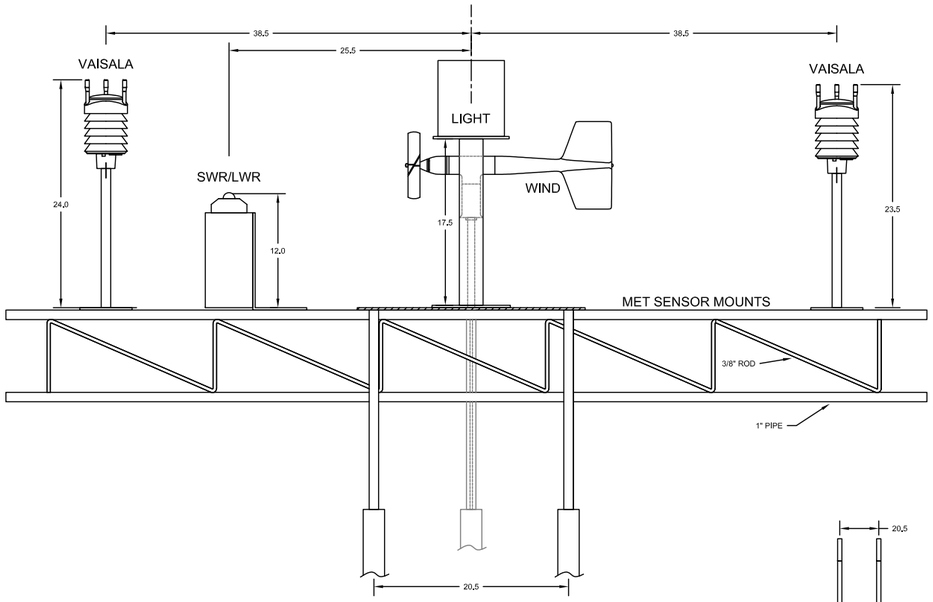

SIDE VIEW LOOKING FWD

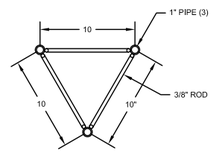

CROSSTREE END VIEW

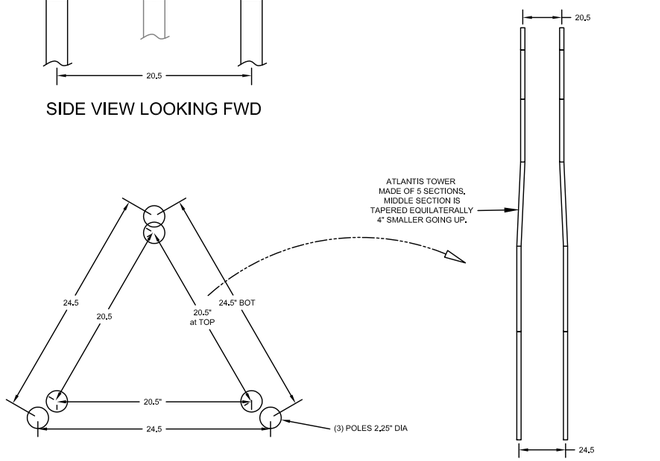

MAST POLES PLAN VIEW

MAST SIDE VIEW LKG FWD

12 IN SCALE

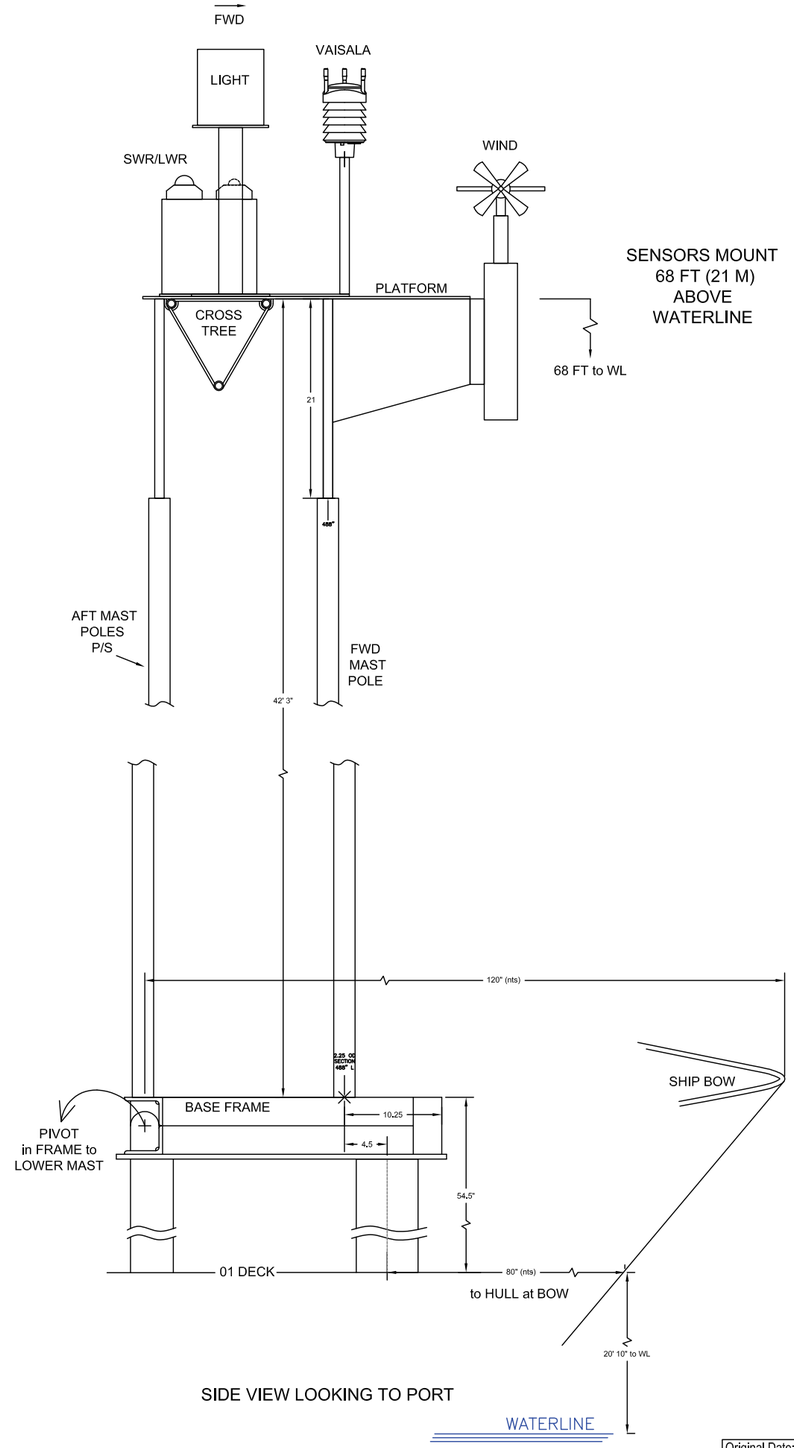

SIDE VIEW LOOKING TO PORT

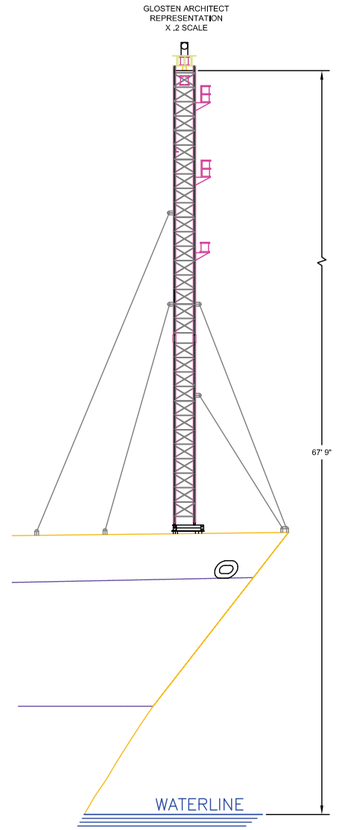

Original Date: 02/21/12	Woods Hole Oceanographic Institution Shipboard Scientific Services Group
Draft: BGPD	ATLANTIS MET MAST
Size: B	
Scale: NA	
Modified Date: 05/01/13	Dwg # SAT0200 Rev. B Sheet 1 of 1